SEIMM MOTO GUZZI	IMBIELLAGGIO - DISTRIBUZIONE CONNECTING AND TIMING SYST. EQUIPAGE MOBILE - DISTRIBUT. PLEUEL UND STEUERUNG	850 LM Tavola - Drawing Table - Bild 4

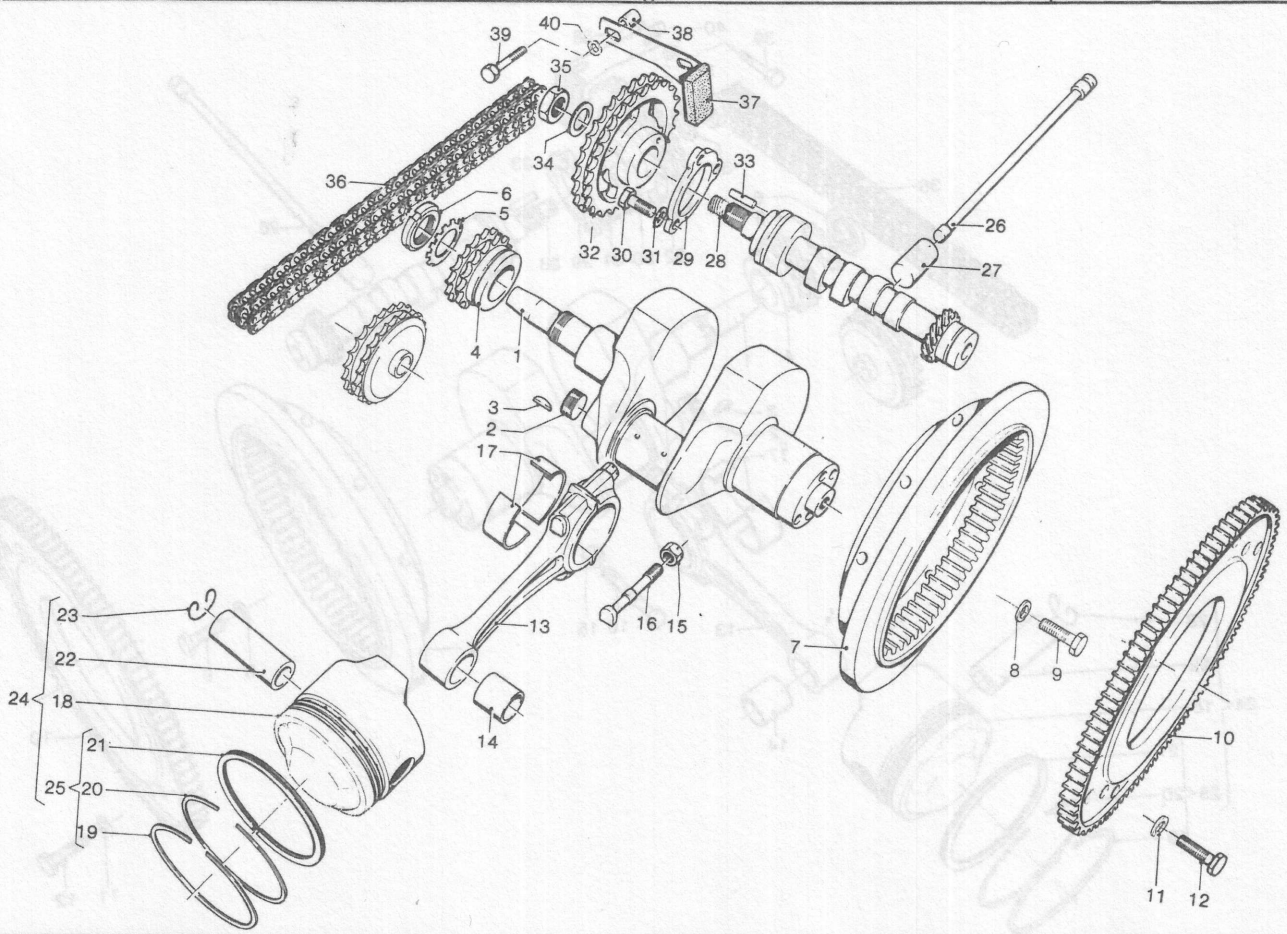

NOTE NOTES NOTES MARKE	POS. N.	N. COD. CODE No. No. CODE CODE Nr.	Q.tà Q.ty Q.té M.ge	DENOMINAZIONE	DESCRIPTION	DESIGNATION	BEZEICHNUNG
	1	14 06 42 03	1	Albero motore	Crankshaft	Vilebrequin	Kurbelwelle
	2	12 06 54 00	1	Tappo	Plug	Bouchon	Stopfen
	3	91 70 23 55	1	Chiavella	Cotter	Clavette	Keil
	4	14 07 20 01	1	Pignone motore	Driving pinion	Pignon d'attaque	Antriebritzel
	5	95 02 80 25	1	Rosetta	Washer	Rondelle	Scheibe
	6	93 60 10 26	1	Ghiera bloccaggio	Ring nut	Collier de serrage	Gewindering
	7	14 06 70 50	1	Volano motore	Flywheel	Volant	Schwungrad
	8	14 61 59 01	6	Rondella	Washer	Rondelle	Scheibe
	9	12 06 77 01	6	Vite	Screw	Vis	Schraube
	10	17 06 79 00	1	Corona dentata	Flywheel ring gear	Couronne dentée	Schwungradkranz
	11	95 12 00 85	8	Rosetta elastica	Spring washer	Rondelle élastique	Federring
	12	98 05 44 20	8	Vite	Screw	Vis	Schraube
	13	14 06 15 50	2	Biella completa	Connecting rod, assy	Bielle complète	Pleuelstange, kpl.
	14	91 11 21 22	2	Boccola	Bush	Bague	Buchse
	15	92 73 10 90	4	Dado autobloccante	Self-locking nut	Ecrou de sûreté	Sicherungsmutter
	16	14 06 22 01	4	Vite	Screw	Vis	Schraube
	17	12 06 20 05	4	Semicuscinetti di biella	Big-end half bearing	Demi-couss. tête bielle	Pleuellagerschale
	17	12 06 20 06	4	Semicuscinetto (min. mm 0,254)	Half-bearing (undersize mm 0.254)	Demi-coussinet (minoré mm 0,254)	Lagerschale (Untergrösse mm 0,254)
	17	12 06 20 07	4	Semicuscinetto (min. mm 0,508)	Half-bearing (undersize mm 0.508)	Demi-coussinet (minoré mm 0,508)	Lagerschale (Untergrösse mm 0,508)
	17	12 06 20 08	4	Semicuscinetto (min. mm 0,762)	Half-bearing (undersize mm 0.762)	Demi-coussinet (minoré mm 0,762)	Lagerschale (Untergrösse mm 0,762)
	18	14 06 04 50	2	Pistone	Piston	Piston	Kolben
	18	14 06 05 51	2	Pistone (magg. 4/10)	Piston (oversize 4/10)	Piston (majoré 4/10)	Kolben (über. 4/10)
	18	14 06 05 52	2	Pistone (magg. 6/10)	Piston (oversize 6/10)	Piston (majoré 6/10)	Kolben (über 6/10)
	19	17 06 07 00	2	Fascia elast. super.	Piston ring	Segment d'étanchéité	Kolbenring
	19	17 06 07 01	2	Fascia sup. (magg. 4/10)	Piston ring (over. 4/10)	Seg. d'étanch. (m. 4/10)	Kolbenring (über, 4/10)
	19	17 06 07 02	2	Fascia sup. (magg. 6/10)	Piston ring (over. 6/10)	Seg. d'étanch. (m. 6/10)	Kolbenring (über. 6/10)
	20	17 06 09 00	2	Fascia elast. interm.	Piston ring	Segment d'étanchéité	Kolbering
	20	17 06 09 01	2	Fascia int. (magg. 4/10)	Piston ring (over. 4/10)	Seg. d'étanch. (m. 4/10)	Kolbenring (über. 4/10)
	20	17 06 09 02	2	Fascia int. (magg. 6/10)	Piston ring (over. 6/10)	Seg. d'étanch. (m. 6/10)	Kolbenring (über. 6/10)
	21	17 06 10 00	2	Fascia elast. raschiaolio	Scraper ring	Segment racleur	Ölabstreifring
	21	17 06 10 01	2	Fascia raschiaolio (magg. 4/10)	Scraper ring (oversize 4/10)	Segment racleur (majoré 4/10)	Ölabstreifring (über. 4/10)
	21	17 06 10 02	2	Fascia raschiaolio (magg. 6/10)	Scraper ring (oversize 6/10)	Segment racleur (majoré 6/10)	Ölabstreifring (über. 6/10)

Seimm Moto Guzzi S.p.A. - 22054 Mandello del Lario (Co) - Tel. 731112 - 732512 - Tx: 38095 - 5/78 - 2500 K Printed in Italy

Dati indicativi soggetti a modifiche senza impegno di preavviso - All data are subject to modification without notice

Esedi - Scanzorosciate (Bg)

850 LM

Tavola - Drawing
Table - Bild **4**

IMBIELLAGGIO - DISTRIBUZIONE
CONNECTING AND TIMING SYST.
EQUIPAGE MOBILE - DISTRIBUT.
PLEUEL AND STEUERUNG

SEIMM
MOTO GUZZI

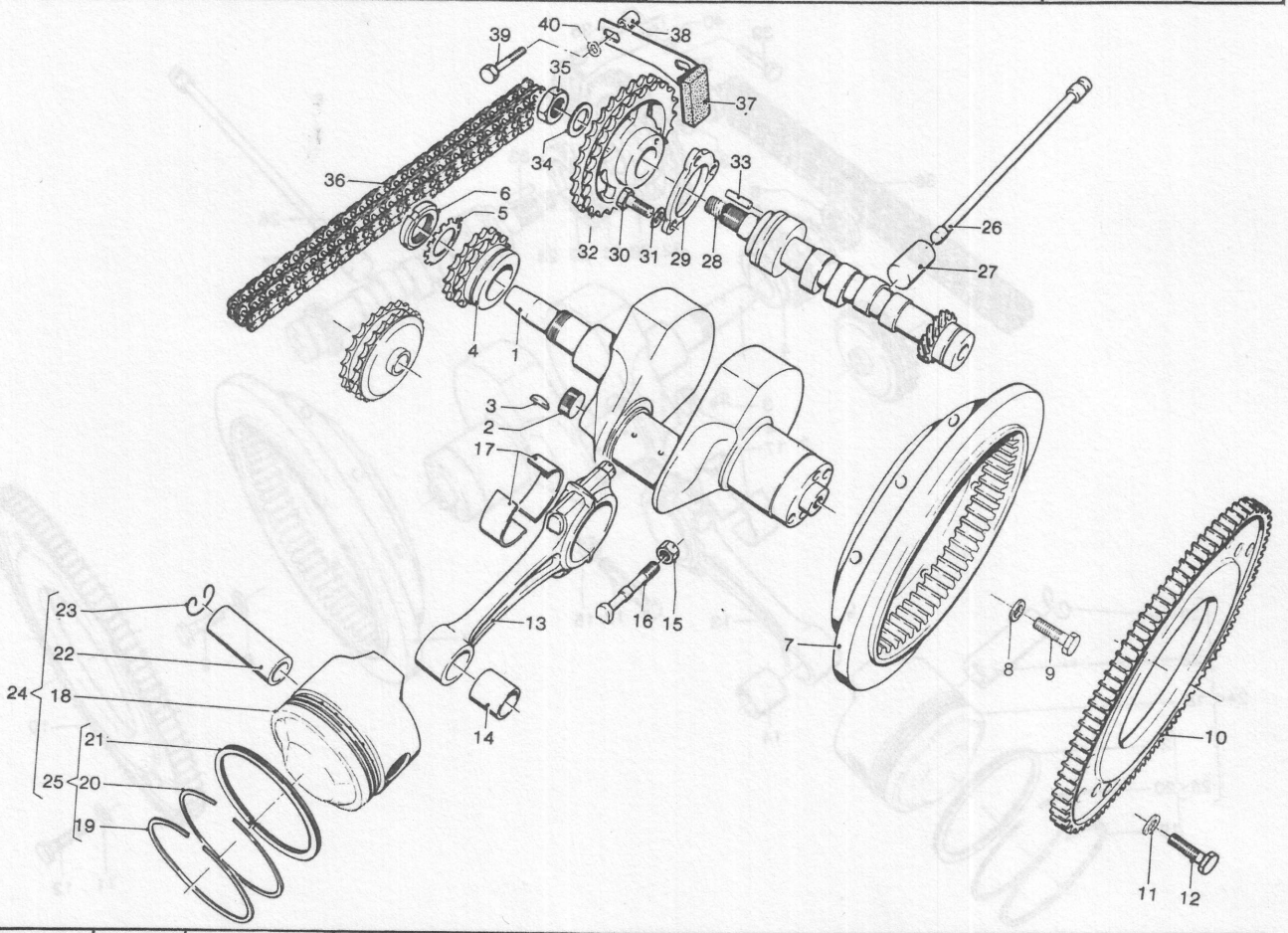

NOTE NOTES NOTES MARKE	POS. N.	N. COD. CODE No. No. CODE CODE Nr.	Q.tà Q.ty Q.té M.ge	DENOMINAZIONE	DESCRIPTION	DESIGNATION	BEZEICHNUNG
	22	13 06 12 60	2	Spinotto	Wrist pin	Axe de piston	Kolbenbolzen
	23	90 35 10 37	4	Molletta	Circlip	Jonc d'arrêt	Sprengring
	24	14 06 02 50	2	Pistone completo	Piston, assy	Piston complet	Kolben, kpl.
	24	14 06 03 51	2	Pistone completo (magg. 4/10)	Piston, assy (oversize 4/10)	Piston complet (majoré 4/10)	Kolben, kpl. (über. 4/10)
	24	14 06 03 52	2	Pistone completo (magg. 6/10)	Piston, assy (oversize 6/10)	Piston complet (majoré 6/10)	Kolben, kpl. (über 6/10)
	25	14 06 06 50	2	Gruppo fasce elastiche	Piston ring set	Ensemble de segments	Kolbenringausrüstung
	25	14 06 06 51	2	Gruppo fasce elastiche (magg. 4/10)	Piston ring set (oversize 4/10)	Ensemble de segments (majoré 4/10)	Kolbenringausrüstung (über. 4/10)
	25	14 06 06 52	2	Gruppo fasce elastiche (magg. 6/10)	Piston ring set (oversize 6/10)	Ensemble de segments (majoré 6/10)	Kolbenringausrüstung (über 6/10)
	26	17 04 50 50	4	Astina com. bilancieri	Tapper stem	Tige de poussoir	Stossstange
	27	10 04 58 00	4	Punterie	Valve plunger	Poussoir de soupape	Ventilstössel
	27	10 04 58 01	4	Punterie (magg. mm 0,05)	Valve plunger (oversize mm 0.05)	Poussoir de soupape (majoré mm 0,05)	Ventilstössel (Obergrösse mm 0,05)
	27	10 04 58 02	4	Punterie (magg. mm 0,10)	Valve plunger (oversize mm 0.10)	Poussoir de soupape (majoré mm 0,10)	Ventilstössel (Obergrösse mm 0,10)
	28	14 05 33 01	1	Albero a camme	Camshaft	Arbre de distribution	Nockenwelle
	29	12 05 40 00	1	Flangia	Flange	Flasque	Flansch
	30	98 05 43 20	3	Vite	Screw	Vis	Schraube
	31	95 12 00 65	3	Rosetta	Washer	Rondelle	Scheibe
	32	13 05 45 02	1	Ingr. com. distrib.	Camshaft gear	Pignon d'arbre distrib.	Nockenwellenrad
	33	95 51 20 60	1	Spina	Pin	Goupille Mecanindus	Stift
	34	14 43 34 00	1	Rosetta	Washer	Rondelle	Scheibe
	35	92 60 25 18	1	Dado	Nut	Ecrou	Mutter
	36	13 05 80 00	1	Catena com. distrib.	Timing chain	Chaîne de distrib.	Steuerkette
	37	13 05 82 00	1	Piastra tendicatena	Chain stretching drive	Tendeur de chaîne	Kettenspanner
	38	91 18 09 15	2	Tubetto distanziale	Spacer	Entretoise	Distanzstück
	39	98 05 44 40	2	Vite	Screw	Vis	Schraube
	40	61 27 03 00	2	Rosetta elast. ondul.	Washer	Rondelle	Scheibe

Seimm Moto Guzzi S.p.A. - 22054 Mandello del Lario (Co) - Tel. 731112 - 732512 - Tx: 38095 - 5/78 - 2500 K Printed in Italy

Dati indicativi soggetti a modifiche senza impegno di preavviso - All data are subject to modification without notice

Esati - Scanzorosciate (Bg)